Rain-Clik®

OWNER'S MANUAL

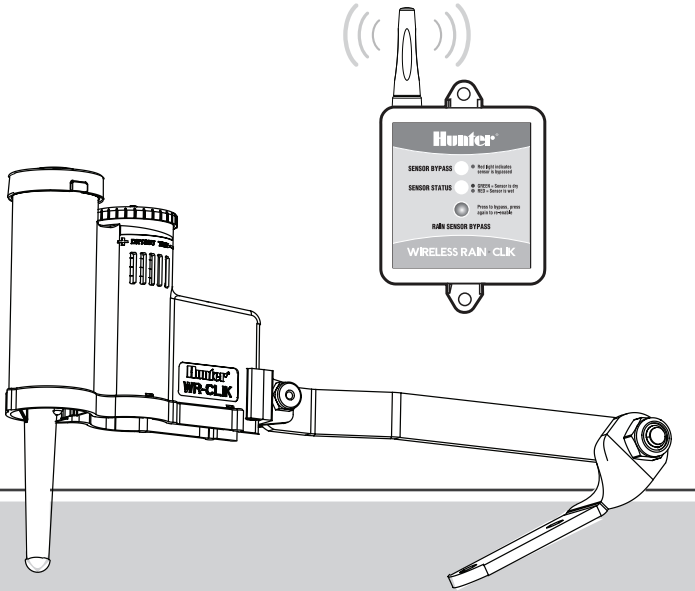

Rain Sensor With Optional Freeze Shutoff for Automatic Irrigation Systems

For use with WR-CLIK and WRF-CLIK Sensors

Hunter®

Need more helpful information on your product? Find tips on installation, controller programming, and more.

http://**hunter.direct/wrc**

1-800-733-2823

Table of Contents

3 Table of Contents

5 Features
5 Wireless Rain-Clik features include:

6 Wireless Rain-Clik Components
6 Wireless Rain-Clik Transmitter

7 Wireless Rain-Clik Components
7 Wireless Rain-Clik Receiver

8 Mounting the Receiver
8 Wiring the Receiver to a Hunter X-Core®, X2 Pro-C®, PCC, ICC2, or I-Core®
8 Wiring the Receiver to a Hunter ACC or ACC2
9 Wiring the Receiver to a Hydrawise® Enabled Controller
9 Wiring the Receiver to Other Controllers: Normally Closed Sensor Applications

10 Mounting the Receiver
10 Normally Open Sensor Applications
10 Controllers with 24 VAC Solenoids and a Booster Pump

11 Mounting the Receiver
11 Standard Mounting
11 Gutter Mounting (Optional)

12 Adjustments and Operation
12 Hints for Mounting the Transmitter
12 Transmitter Operation
12 Receiver Operation
13 Bypassing the Sensor
13 Setting the Transmitter Address at the Receiver

14 Adjustments and Operation
14 Battery Life
14 To Check the Status of the Battery in the Transmitter
14 System Will Not Turn On at All
14 System Will Not Shut Off Even After Heavy Rainfall
14 Sensor Bypass LED Is Flashing Red
15 Sensor FCC ID: M3UWRCE
16 FCC Declaration of Conformity
17 CE and Australia Notice
18 Industry Canada Notice
18 Sensor - IC:2772A-WRCE
Receiver - IC:2772A-WRCER
18 Operation is subject to the following two conditions:

19 Notes

Wireless Rain-Clik sensors attach quickly and easily to your controller.

Wireless Rain-Clik features include:

1. **Quick Response®** – Innovative technology that turns off the irrigation system immediately rather than after it has accumulated a fixed amount of rain. No calibration is required.
2. **Maintenance-Free Design** – Provides trouble-free operation for at least 5 years. There are no batteries to replace.
3. **Wireless Operation Up to 800' (243 m)** - No wires are required between the rain sensor and controller.
4. **Two models available: Wireless Rain-Clik (WR-CLIK)** – Acts as a switch to deactivate automatic watering of your irrigation controller when it rains. Once rain has stopped and the sensor has dried out, automatic irrigation will resume.
5. **Wireless Rain/Freeze-Clik (WRF-CLIK)** – The Wireless Rain/Freeze-Clik includes a freeze sensor that is designed to keep the irrigation system from operating when temperatures drop to 37˚F (3˚C) or below. When temperatures rise above this temperature, the sensor will enable automatic watering.
6. **Automatic Synchronization** – The Wireless Rain-Clik transmitter will send wireless signals every hour to the receiver to ensure that the sensor and receiver are continuously synchronized.
7. **Lost Communication/Battery Status Indication** – The Sensor Bypass LED will flash RED if the receiver has not received a signal from the transmitter. This can indicate a low or dead battery.

Wireless Rain-Clik Transmitter

1. **Manual Test Spindle** – Press and hold the manual test spindle to confirm proper operation of your transmitter.
2. **Vent Ring** – Used to adjust the reset rate or dry out time for the sensors. Opening the vents will decrease the reset rate, while closing the vents will increase the time it takes for the discs to dry out.

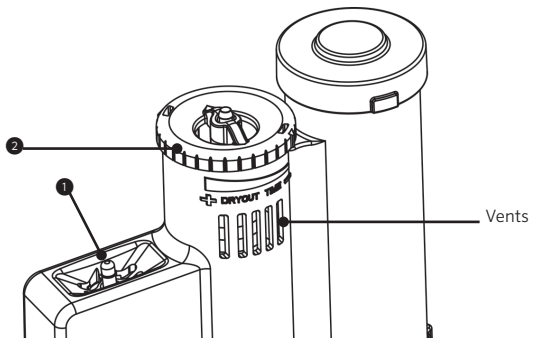

3. **Radio Antenna** – Transmits a wireless signal to the receiver up to 800' (243 m). The antenna should be oriented vertically.

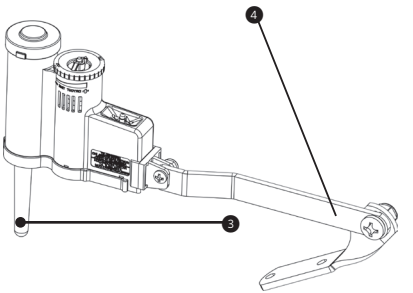

4. **Mounting Arm** – Metal extension arm for mounting the sensor.
5. **Battery Status LED** – Used to determine the status of the sealed battery. Pushing the manual test spindle will flash the LED light indicating that the battery is good.

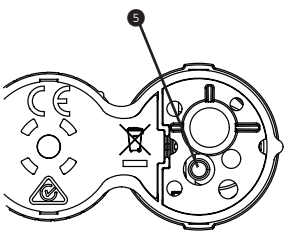

Wireless Rain-Clik Receiver

1. **Bypass Button** – Allows automatic or manual watering when the sensor is active.
2. **Sensor Bypass LED** – Indicates when sensor has been bypassed.
3. **Sensor Status LED** – Used to indicate the status of the sensor.
4. **Radio Antenna** – Receives a wireless signal from the transmitter up to 800' (243 m). The antenna should be oriented vertically.
5. **AC Power Wires** – The two yellow wires are attached to a 24 VAC source from the controller.
6. **Sensor Wires** – The sensor wires are attached to either the sensor terminals in the controller or in-line with the valve common wire.
   Blue/White Wires – Used for normally closed sensor applications.
   Blue/Orange Wires – Used for normally open sensor applications.
7. **Rubber Cover** – Used to protect the receiver when mounted in outdoor locations.

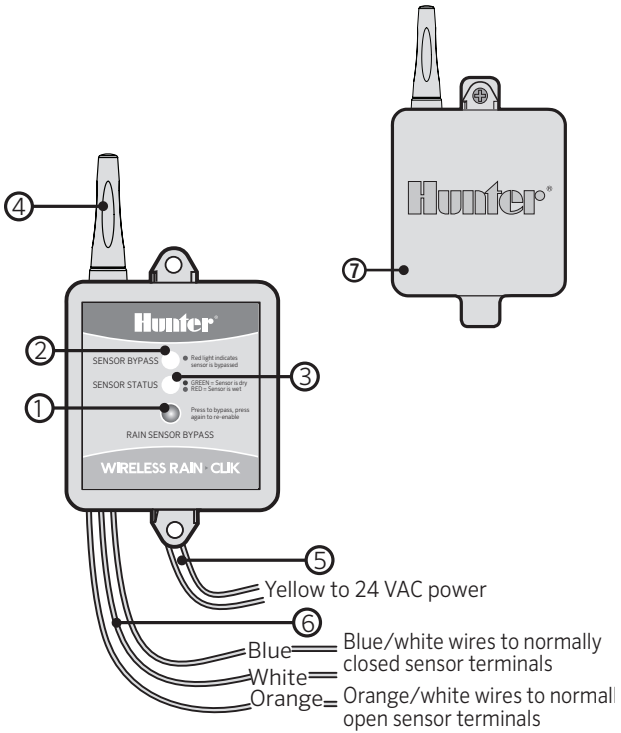

Wiring the Receiver to a Hunter X-Core®, X2 Pro-C®, PCC, ICC2, or I-Core®

1. Remove the sensor jumper across the two SEN terminals in the controller.
2. Attach the two yellow wires to the 24 VAC terminals.
3. Attach the blue wire to one SEN terminal and the white wire to the other SEN terminal.

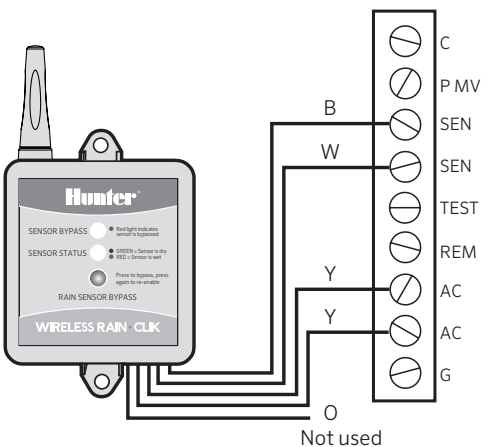

Wiring the Receiver to a Hunter ACC or ACC2

1. Connect the blue and white wire to any of the four Sensor Terminal pairs (Sen 1 shown).
2. Attach yellow wires to 24 VAC and COM terminals.
3. Use features at the “Set Sensor Operation” dial position on ACC to complete setup.
4. Use Devices and Sensor Response options on ACC2 to complete setup.
5. See ACC/ACC2 owner’s manuals for further details.

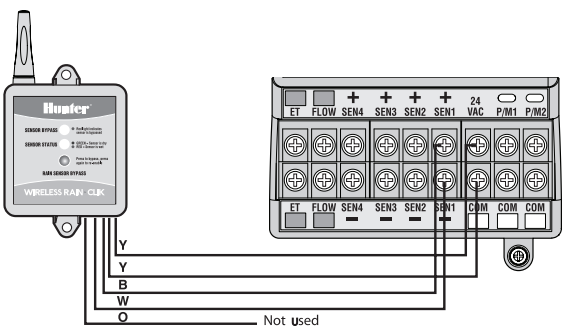

Wiring the Receiver to a Hydrawise® Enabled Controller

1. Attach the two yellow wires to the 24 VAC terminals.
2. Attach the blue wire to one SEN terminal and the white wire to the SEN COM terminal.

Wiring the Receiver to Other Controllers: Normally Closed Sensor Applications

3. Attach the two yellow wires to the 24 VAC terminals.
4. Attach the blue and white wires to the sensor terminals (if available) or in-line with the valve common wire.

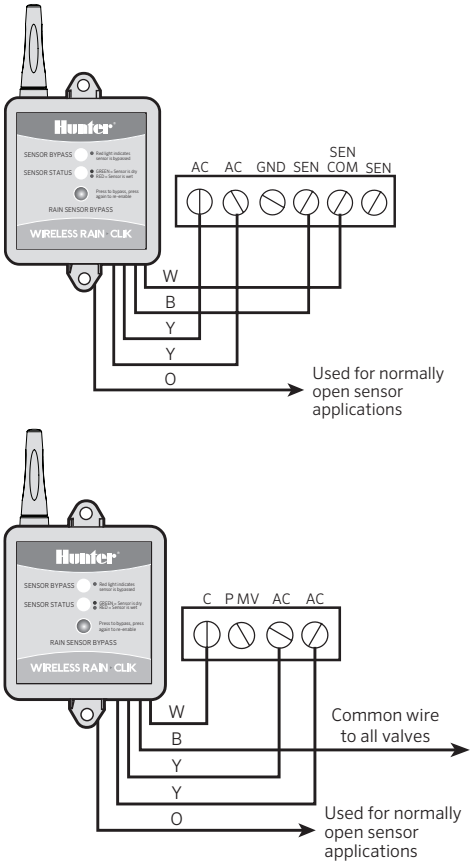

Normally Open Sensor Applications

A few controllers on the market require normally open rain sensors. To attach the receiver to this type of controller, attach the blue and orange wires to the sensor input.

Controllers with 24 VAC Solenoids and a Booster Pump

1. Locate the common wire to the solenoid valves and the common wire to the pump relay. If these two wires are connected to the “common” terminal on the controller, disconnect both of them.
2. Twist together these wires along with one of the wires from the Wireless Rain-Clik and secure with a wire nut.
3. Attach the other wire from the Wireless Rain-Clik receiver to the “common” terminal on the controller.

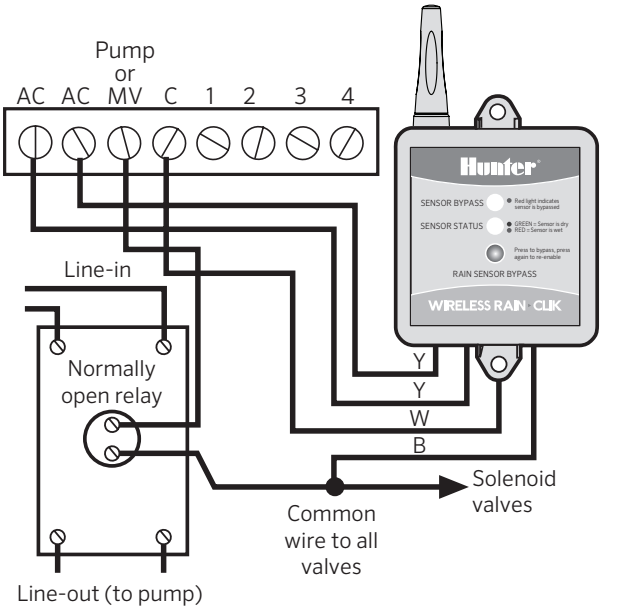

Note:
The pump circuit output must be 24 VAC. Do not proceed if 115 VAC.

Standard Mounting

Using the screws provided with your sensor, mount the transmitter on any surface where it will be exposed to unobstructed rainfall, but not in the path of sprinkler spray. The sensor should be oriented upright (as pictured), but the swivel bracket can be moved for mounting on any angled surface. Loosen the locknut and screw before swiveling the bracket, and then re-tighten.

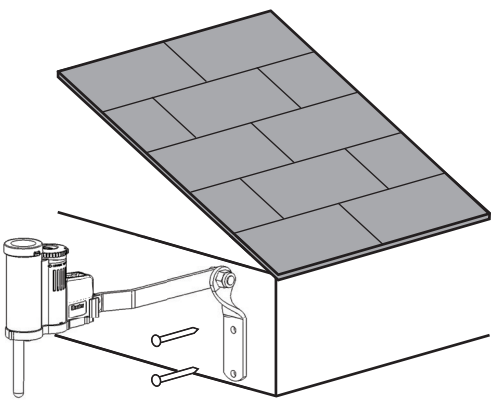

Standard Mount

Gutter Mounting (Optional)

The sensor gutter mount can be purchased as an optional accessory for your Wireless Rain-Clik (order p/n SGM). The SGM allows the transmitter to be mounted directly to the edge of a gutter. Install the SGM on the transmitter by removing the metal extension arm supplied with your sensor and reinstalling the SGM. Position the gutter mount on the edge of the gutter and twist the thumbscrew to secure it in place.

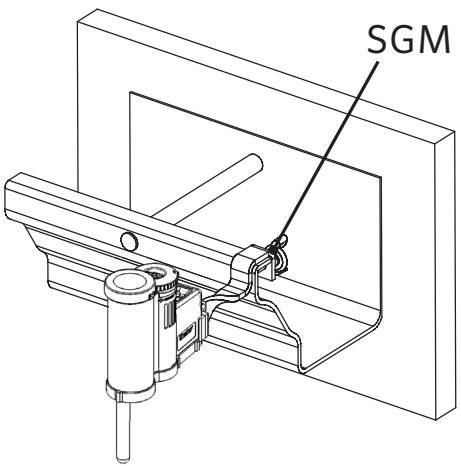

Gutter Mount

Hints for Mounting the Transmitter

- Choose a location such as the side of a building or post. The closer the transmitter is to the receiver, the better the reception. Do not exceed 800' (243 m).
- To ensure maximum range in communication, mount the receiver and transmitter away from sources of electrical interference (e.g., control panels, transformers, etc.) or metal objects. Best performance is obtained when no physical obstruction is between the transmitter and receiver.
- Correct placement of the Wireless Rain/Freeze-Clik® model is important for accurate temperature sensing. The best location would be out of direct sunlight.
- The reset rate refers to the amount of time it takes for the sensor to dry out sufficiently for the sprinkler system to be allowed to come back on. The mounting location will affect this rate. For example, mounting the transmitter in a very sunny location may cause the sensor to dry out sooner than desired. Similarly, mounting the sensor in constant shade may keep the sensor from drying out sooner.

Transmitter Operation

There is nothing to set up with the Wireless Rain-Clik.

Receiver Operation

The receiver has two LED lights that indicate the state of the system.

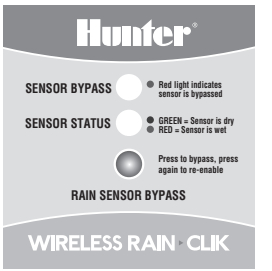

1. **SENSOR STATUS LED:**
   RED – Sensor is wet (watering disabled)
   GREEN – Sensor is dry (watering enabled)
   YELLOW – Sensor is in addressing mode
2. **SENSOR BYPASS LED:**
   RED – Rain sensor is bypassed (even though the sensor is bypassed, the STATUS LED will continue to alert you of the state of the sensor — wet or dry)
   OFF – Rain sensor is enabled
   FLASHING RED – Indicates that communication between the transmitter and receiver was lost

Note:
When you first apply power to the receiver, the SENSOR STATUS LED will be RED. Press the manual test spindle on the transmitter for five seconds and release the spindle. The SENSOR STATUS LED will turn GREEN indicating proper operation.

Bypassing the Sensor

The sensor can be bypassed by using the built-in bypass feature on the receiver. To bypass the sensor, press the SENSOR BYPASS button on the receiver. The bypass status light will turn red when the sensor is bypassed. Pressing the SENSOR BYPASS button again will re-enable the sensor and the sensor bypass light will go out.

Setting the Transmitter Address at the Receiver

Each transmitter is produced with a unique address. A receiver must learn this address to work with that transmitter. This step is only necessary if transmitters and receivers are purchased separately.

1. Prior to applying power (yellow wires) to the receiver, press and hold the bypass button on the receiver.
2. While the bypass button is depressed, apply power to the receiver. The sensor status indicator light should light up yellow indicating that the receiver is ready to learn a new address.
3. Press and hold the quick response button on the transmitter.
4. Within four seconds, the receiver's sensor status indicator light should turn red. The receiver has now learned the address and it will be retained even in the event of a power outage.
5. Release the button on the transmitter. The sensor status indicator light should turn green.

Note:
Units purchased as a kit will already have their communication address preset. No addressing is necessary. However, if the receiver or transmitter is replaced you need to reset the address.

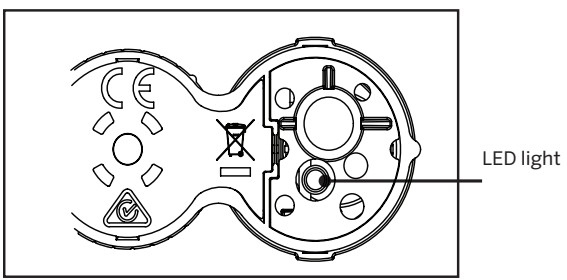

Battery Life

The Wireless Rain-Clik transmitter is designed to operate for at least 5 years with its sealed, maintenance-free battery. The transmitter is available as a replacement part (WRCLIK-TR). Should you need to change the transmitter, the receiver will have to learn the new transmitter address.

To Check the Status of the Battery in the Transmitter

1. Press and hold the quick response spindle at the top of the sensor.
2. Within a few seconds the LED light on the bottom of the sensor will briefly flash.
3. Release the spindle and the LED light will flash again. If the LED flashes, the battery in the transmitter is good.

If you are experiencing problems with your Wireless Rain-Clik sensor, follow these simple checks first before assuming the unit is defective and replacing it.

System Will Not Turn On at All

- Check to make sure that the sensor discs are dry and the switch “clicks” on and off freely by pressing the top of the spindle.
- Look for breaks in the wire leading to the receiver and check all connections.
- Verify outside air temperature (for Rain/Freeze-Clik installations).

System Will Not Shut Off Even After Heavy Rainfall

- Remove the sensor jumper across the two SEN terminals. Check to make sure that rainfall is hitting the sensor.
- Look for breaks in the wire leading to the receiver and check all connections.
- Check the battery in the transmitter.

Sensor Bypass LED Is Flashing Red

- Check that the battery in the transmitter is good.
- Check for obstructions around the transmitter or receiver antenna.

Sensor FCC ID: M3UWRCE

This device complies with FCC rules Part 15. Operation is subject to the following two conditions:

- This device may not cause harmful interference and
- This device must accept any interference received, including interference that may cause undesired operation.

This equipment has been tested and found to comply with the limits for class B digital devices, pursuant to part 15 of the FCC Rules. These limits are designed to provide reasonable protection against harmful interference in a residential installation. This equipment generates, uses, and can radiate radio frequency energy and if not installed and used in accordance with the instructions, may cause harmful interference to radio communications. However, there is no guarantee that interference will not occur in a particular installation. If this equipment does cause harmful interference to radio or television reception, which can be determined by turning the equipment on and off, the user is encouraged to try to correct the interference by one or more of the following measures:

- Reorient or relocate the receiving antenna
- Increase the separation between the equipment and the receiver
- Connect the equipment to an outlet on a circuit different from that to which the receiver is connected
- Consult the dealer or an experienced radio/TV technician for help

The user is cautioned that changes and modifications made to the equipment without the approval of the manufacturer could void the user's authority to operate this equipment.

FCC Declaration of Conformity

This equipment has been tested and found to comply with the limits for class B digital devices, pursuant to part 15 of the FCC Rules. These limits are designed to provide reasonable protection against harmful interference in a residential installation. This equipment generates, uses, and can radiate radio frequency energy and if not installed and used in accordance with the instructions, may cause harmful interference to radio communications. However, there is no guarantee that interference will not occur in a particular installation.

If this equipment does cause harmful interference to radio or television reception, please refer to you user's manual for instructions on correcting the problem. The undersigned, hereby declare that the equipment specified above conforms to the above requirements.

Trade Name	Wireless Rain/Freeze-Clik
Model Number	WR-Clik-R
Compliance Test Report Number	B0021703
Compliance Test Report Date	29 Jan 2010
Responsible Party	Hunter Industries Incorporated
Address	1940 Diamond St, San Marcos, CA 92078
Telephone	760-744-5240



Andrew Bera, Senior Regulatory Compliance Engineer

Place	San Marcos, CA
Date	October 25, 2017

CE and Australia Notice

Hunter Industries hereby declares that this remote control device is in compliance with the essential requirements and other relevant provisions of Directive 2014/53/EU.

Declaration of Conformity: We, Hunter Industries Incorporated, 1940 Diamond Street, San Marcos, CA 92078, declare under our own responsibility that the Wireless Rain/Freeze-Clik, model numbers WR-Clik-TR, WRF-Clik-TR and WR-Clik-R, to which this declaration refers, conforms with the relevant standards:

Emissions:

- ETSI EN 300 220-1 V3.1.1
- ETSI EN 300 220-2 V3.1.1
- ETSI EN 301 489-1 V2.2.0
- ETSI EN 301 489-3 V2.1.1





Andrew Bera, Senior Regulatory Compliance Engineer

Place	San Marcos, CA
Date	October 25, 2017

Industry Canada Notice

Sensor - IC:2772A-WRCE
Receiver - IC:2772A-WRCER

Operation is subject to the following two conditions:

- This device may not cause harmful interference and
- This device must accept any interference received, including interference that may cause undesired operation.

CE NOTICE: This notice applies only to models WR-CLIK and WRF-CLIK

CE ⚠	Important Notice: Low power RF product operating in 869.700-870.000 MHz band for indoor or outdoor home and commercial use.

AUS	B	DK	FIN	Member states in the EU with restrictive use for this product are crossed out.
F	D	~~GR~~	IRE	
I	LUX	NL	P	
E	S	UK		

MAXIMUM OUTPUT POWER	
Frequency Band (MHz)	**Maximum** Power (mW)
433.05 - 434.790	0.1

Helping our customers succeed is what drives us. While our passion for innovation and engineering is built into everything we do, it is our commitment to exceptional support that we hope will keep you in the Hunter family of customers for years to come.

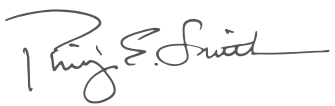

Gene Smith, President,
Landscape Irrigation and Outdoor Lighting

HUNTER INDUSTRIES INCORPORATED | *Built on Innovation®*
1940 Diamond Street, San Marcos, California 92078, USA
hunterindustries.com

© 2020 Hunter Industries Inc. Hunter, the Hunter logo, and all other trademarks are property of Hunter Industries, registered in the U.S. and other countries.

23-594-G-OM-WRC-US 1/20